PERGO®

ACCESSORIES
Floor-made
Incizo profile
English



General information

From floor to finish!

Floor-made multifunctional profile to finish your floor in matching colours. Simply cut the Incizo profile to the desired shape with our Pergo Vinyl knife and a hook blade.

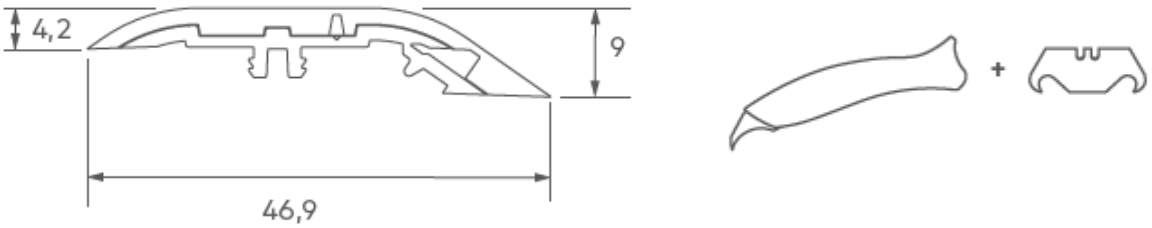

4 in 1 solution:

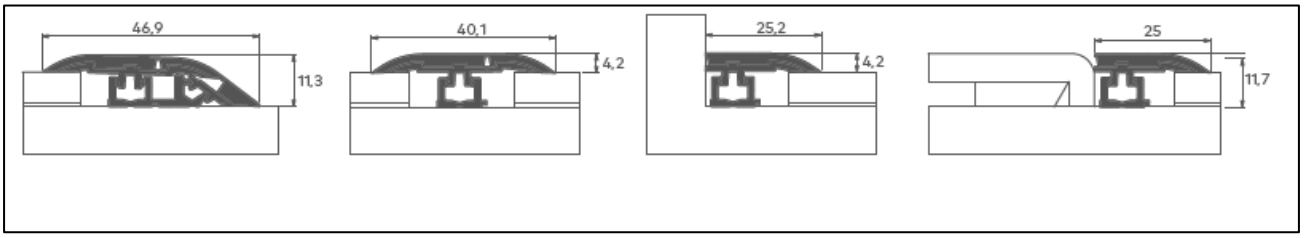

CONTENTS	COMPOSITION	COLOUR
Incizo profile	Pergo planks and tiles	Colour matched
Multifunctional rail	PVC	Black
	planks: 1 pc/pack tiles: 2 pcs/ pack	

ORDER CODE	DIMENSIONS	
PGVFCINCP(-)	Floorlength x 47 x 9 mm	
	Incizo lengths:	
	Small plank:	1 225 mm
	Medium plank:	1 475 mm
	Small tile:	1200 mm
	Medium tile:	1200 mm

Applicable for all Pergo vinyl floors.

The floor must be able to expand and contract on all sides. This is why an expansion gap must be provided on all sides of the floor, around pipes, thresholds and under door frames. The exact expansion gap size depends on the floor type. Consult the installation instructions of your Pergo floor to know the required size of the expansion gap. To finish this gap, we offer a wide range of skirting and profiles.

Applications

With the Incizo 4 in 1 profile, you can finish your floor in every situation.

1. Expansion profile

Connect two floors of the same height: in doorways, L-shaped rooms, or rooms where the floor length or width is bigger than the allowed dimensions of the floor. (Please consult the installation instructions of your floor).



2. Adapter profile

Connect two floors of different heights. Make the transition from your vinyl floor to a floor covering at lower height, like tiles (max. height difference of 9mm).



3. End profile

Finish your floor along walls, windows, sliding doors, a slightly higher doorstep or tile floor.



4. Transition profile

Create a nice transition between your vinyl floor and other flooring types, like a fixed carpet.



Preparation

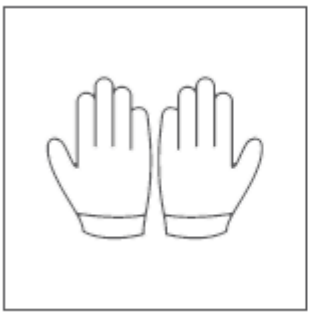

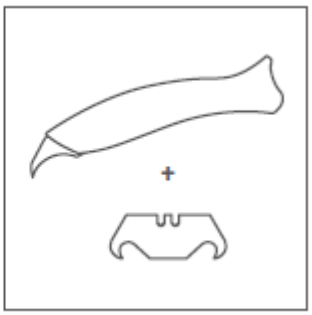

1. Always wear gloves! The edge of the profile and the blade are sharp. Read the instructions carefully before use. Always keep the non-cutting hand positioned above and away from the cutting direction to ensure safe handling of the tool.

2. Our Pergo vinyl knife in combination with a hook blade can be used very simply to cut the profile to the desired profile shape. When cutting the profile, always lay it horizontally on a stable surface.

Installation

Expansion profile

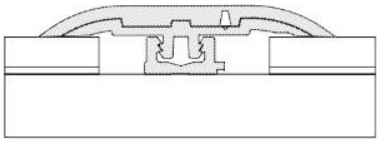

An expansion profile connects two floors of the same height.

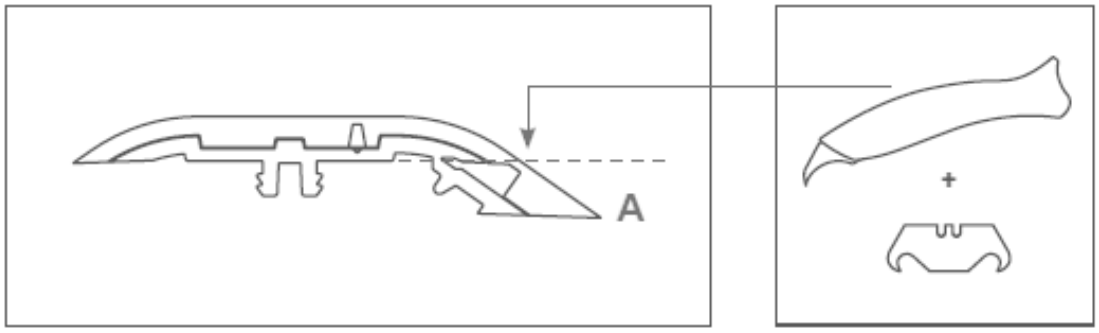

1. First saw the Incizo profile to the correct length. Then use our Pergo Vinyl knife with hook blade to cut away piece A to obtain an expansion profile.
   Tip: for easy cutting, cut both lengths first before removing the piece.

2. Scan the QR code on the packaging to watch a video showing how to cut the floor-made vinyl profile. Place the knife so that the blade fits into the narrow slit in the profile. Try to cut as horizontal as possible.

3. Gently pull the knife backwards, so you cut the profile. Avoid sliding in the top part and make sure not to insert the hook blade too deeply.
   After cutting, remove the cut-offs.

4. While installing the floor, be sure to allow sufficient space between the two surfaces that will be joined with the profile. Mark the ground to indicate how far the edge of the floor will extend. Cut the plastic rail to the correct length and place it in the middle of the open space between the two floor surfaces. Ensure that there is a sufficient expansion gap between the floor and the raised legs of the rail, in which the profile will be clamped.

5. Cut the sub profile.
   The rail can be installed with the Pergo Multiglue (PGGLUE290) to any type of surface.

6. Gently press the profile from one side of the rail to the other. Press against the floor.

Adapter profile

An adapter profile connects two floors of different heights.

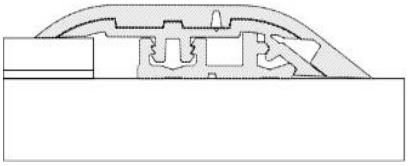

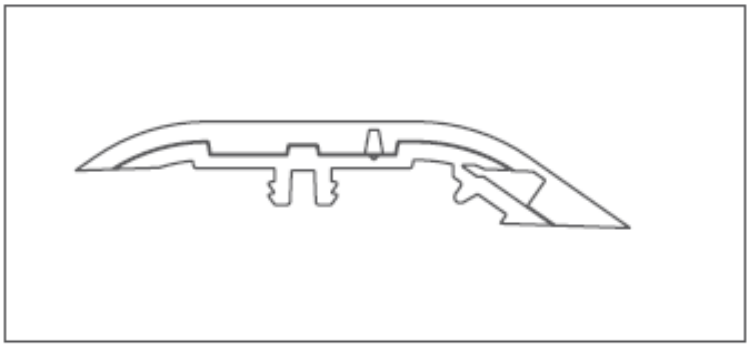

1. First saw the Incizo profile to the correct length.

2. While installing the floor, be sure to allow sufficient space between the two surfaces that will be joined with the profile. Mark the ground to indicate how far the edge of the floor will extend. Cut the plastic rail to the correct length and place it in the middle of the open space between the two floor surfaces. Ensure that there is a sufficient expansion gap between the floor and the raised legs of the rail, in which the profile will be clamped.

3. The rail can be installed with the Pergo Multiglue (PGGLUE290) to any type of surface.

4. Gently press the profile from one side of the rail to the other. Press against the floor.

End profile

An end profile is used to finish your floor along walls or windows.

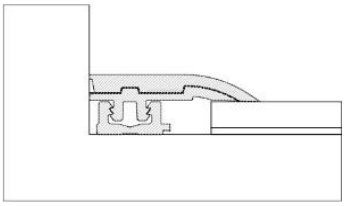

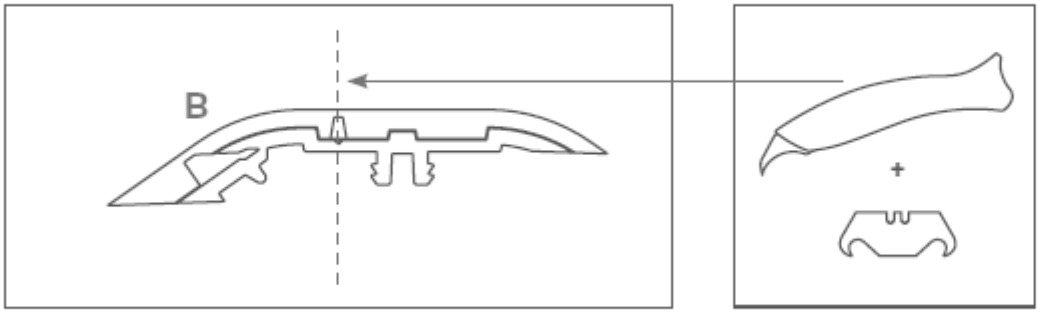

1. First saw the Incizo profile to the correct length. Then use our Pergo Vinyl knife to cut away piece B to obtain an end profile.

2. Scan the QR code on the packaging to watch a video showing how to cut the floor-made vinyl profile. Place the knife so that the blade fits into the narrow slit in the profile.

3. Gently pull the knife backwards, so you cut the profile. Avoid sliding in the top part. After cutting, remove the cut-offs.

4. While installing the floor, be sure to allow sufficient space between the two surfaces that will be joined with the profile. Mark the ground to indicate how far the edge of the floor will extend. Cut the plastic rail to the correct length and place it in the middle of the open space between the two floor surfaces. Ensure that there is a sufficient expansion gap between the floor and the raised legs of the rail, in which the profile will be clamped.

5. Cut the sub profile.
   The rail can be installed with the Pergo Multiglue (PGGLUE290) to any type of surface.

6. Gently press the profile from one side of the rail to the other. Press against the floor.

Transition profile

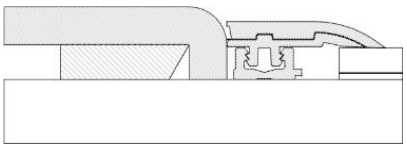

A transition profile is used to create a seamless transition between your vinyl floor and other types of floor coverings, such as fixed carpet.

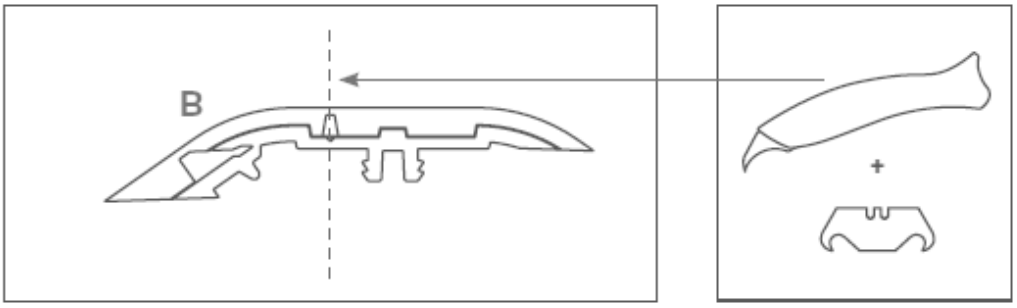

1. First saw the Incizo profile to the correct length. Then use our Pergo Vinyl knife to cut away piece B to obtain an end profile.

2. Scan the QR code on the packaging to watch a video showing how to cut the floor-made vinyl profile. Place the knife so that the blade fits into the narrow slit in the profile.

3. Gently pull the knife backwards, so you cut the profile. Avoid sliding in the top part. After cutting, remove the cut-offs.

4. While installing the floor, be sure to allow sufficient space between the two surfaces that will be joined with the profile. Mark the ground to indicate how far the edge of the floor will extend. Cut the plastic rail to the correct length and place it in the middle of the open space between the two floor surfaces. Ensure that there is a sufficient expansion gap between the floor and the raised legs of the rail, in which the profile will be clamped.

5. Cut the sub profile.
   The rail can be installed with the Pergo Multiglue (PGGLUE290) to any type of surface.

6. Gently press the profile from one side of the rail to the other. Press against the floor.

Unilin bv division flooring
Ooigemstraat 3, 8710 Wielsbeke, Belgium
Tel. +32 56 67 52 11
unilin.com Pergo.com