PERGO®

ACCESSORIES

Small skirting

English



General information

From floor to finish!

From floor to finish! Small skirtings that are made from the same plank and tiles as your floor. Same colour, same texture and same performance. On top of that, they are easy to install with the Uniclic system to make installing smoother and the finish seamless.

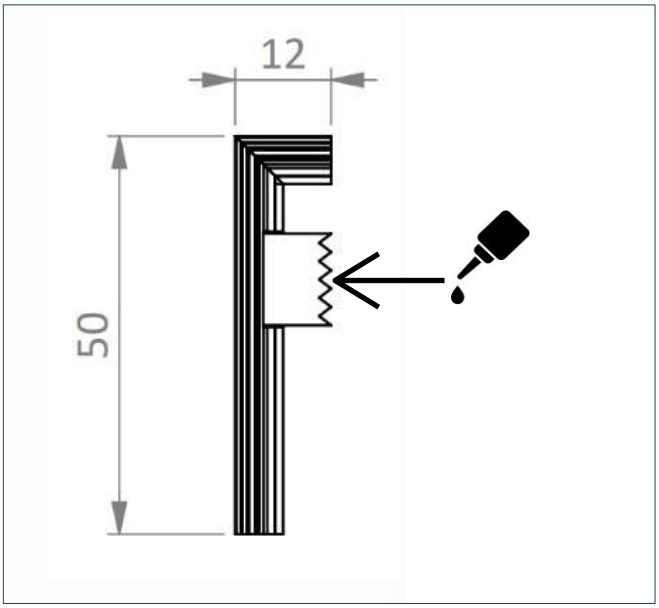

CONTENTS	COMPOSITION	COLOR
6/16 x skirting	Pergo floorplanks & tiles	Color
Packaging	Cardboard wrap	-

ORDER CODE	DIMENSIONS
PGVFCSK(-)	floorlength x 12 x 50 mm

Applicable for all Pergo vinyl floors.

The floor must be able to expand and contract on all sides. This is why an expansion gap must be provided on all sides of the floor, around pipes, thresholds and under door frames. The exact expansion gap size depends on the floor type. Consult the installation instructions of your Pergo floor to know the required size of the expansion gap. To finish of this gap, we offer a wide range of skirting and profiles.

Installation

The skirting can be installed in the following way:

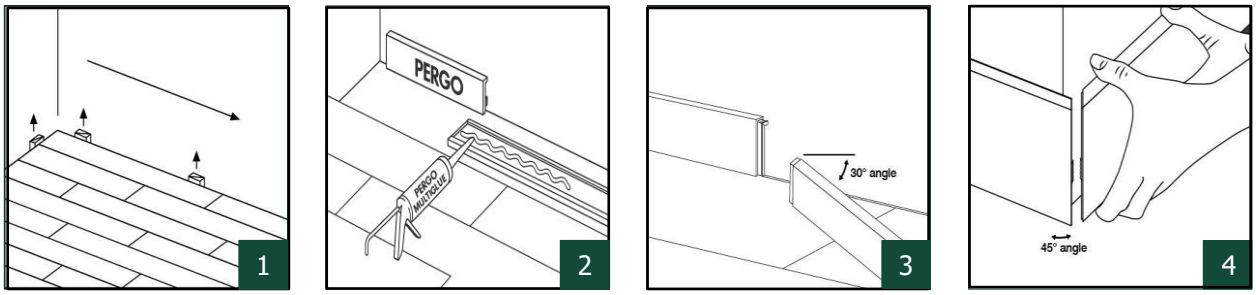

1. Preparation
   - Remove the spacers.

     Important side-note:

     If you start in the left corner you need to make a miter cut on the left side of the "startskirting", otherwise you are not able to finish properly.
   - As the accessories are floor-made, they have the same unique variations as our floors. During installation, make sure that you mix the skirting boards sufficiently so that there are not too many identical, lighter or darker skirting boards next to each other.

2. Apply a cord of Pergo multiglue evenly onto the back part of the skirting that will be in contact with the wall.

3. Click the skirting board into the already installed skirting boards and rotate it against the wall. Press the skirting board firmly against the wall so the glue can adhere properly. The skirting board can also be installed with a nail gun.

4. When you reach a corner, cut the skirting to the correct length and with the correct angle. Use a miter saw to create a perfect fit and use 5 second glue to fix the skirting boards into place.

Tip: For corners and more difficult parts of the installation, we advise you to do a dry-fit first.